BNSF RAILWAY

Snohomish County
Parks and Recreation

BNSF NORTHWEST DIVISION

MEADOWDALE BEACH PARK RAILROAD BRIDGE

WASHINGTON

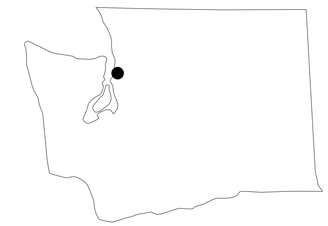

PROJECT LOCATION

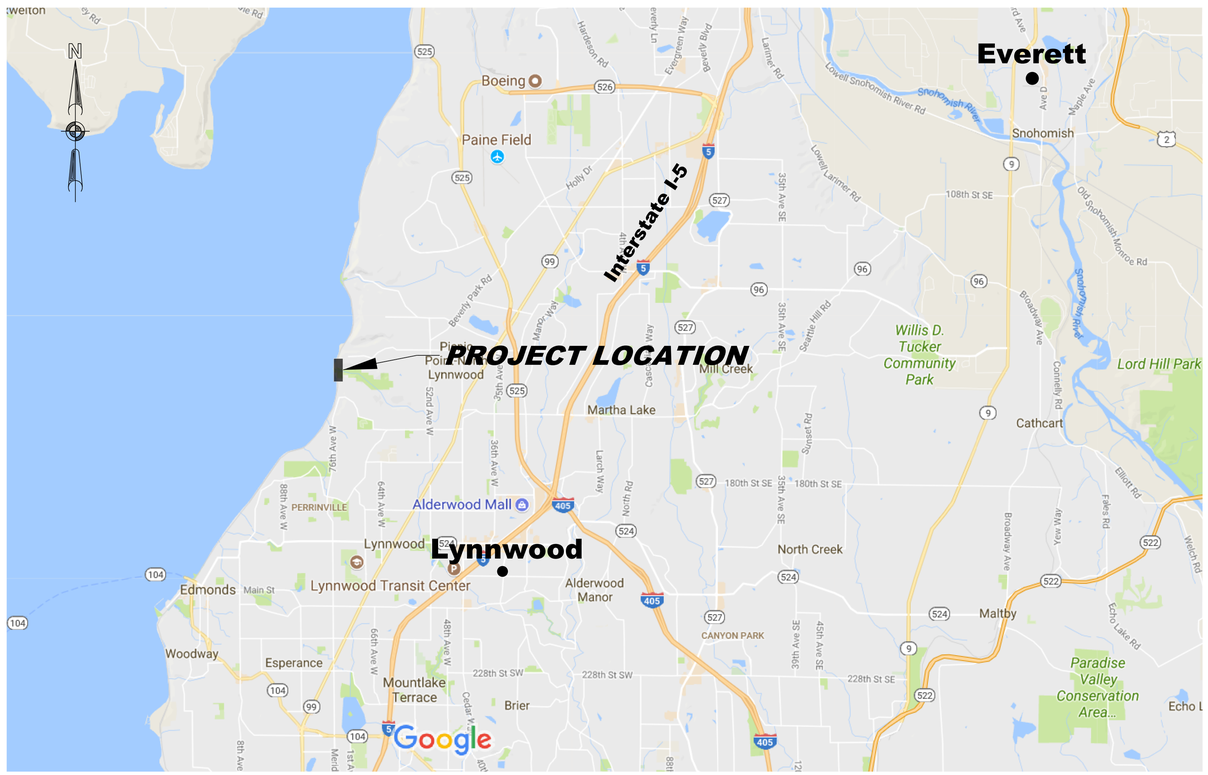

VICINITY MAP
NOT TO SCALE

SCENIC SUBDIVISION
LINE SEGMENT 50
MP 21.80A TO MP 21.80B
STRUCTURAL PLANS

60% DRAFT

TRAVIS D. PAINTER
STATE OF WASHINGTON
51439
STRUCTURAL ENGINEER
PROFESSIONAL ENGINEER

DATE: MAY 4, 2018

HANSON

© Copyright Hanson Professional Services Inc.
11711 S.E. 8th Street, Suite 120
Bellevue, WA 98005

PRELIMINARY
NOT FOR CONSTRUCTION

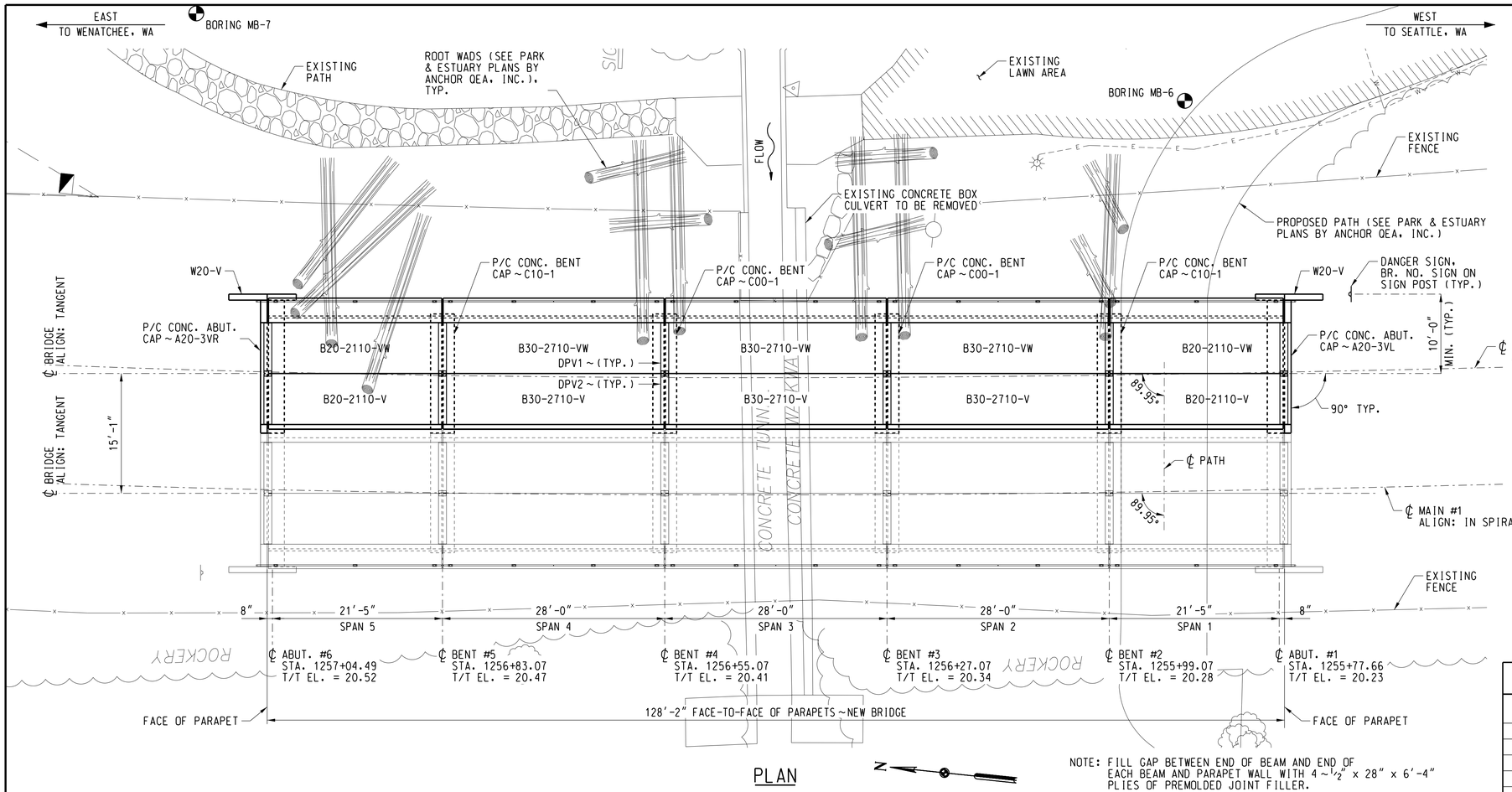

PLAN

NOTE: FILL GAP BETWEEN END OF BEAM AND END OF EACH BEAM AND PARAPET WALL WITH 4 ~ 1/2" x 28" x 6'-4" PLIES OF PREMOLDED JOINT FILLER.

LIST OF DRAWINGS - BR. 21.8A & 21.8B

PLAN NO.	TITLE
0050-0021.800-001	GENERAL PLAN & ELEVATION (MAIN #2)
0050-0021.800-002	GENERAL PLAN & ELEVATION (MAIN #1)
0050-0021.800-003	TYPICAL SECTIONS & PILE LAYOUT PLAN
0050-0021.800-004	CONSTRUCTION SEQUENCE NOTES & DETAILS
0050-0021.800-005	CONSTRUCTION SEQUENCE STAGING SECTIONS I, II & III
0050-0021.800-006	CONSTRUCTION SEQUENCE STAGING SECTIONS IV & V
0050-0021.800-007	CONSTRUCTION SEQUENCE PLAN - STAGE I, II & III
0050-0021.800-008	CONSTRUCTION SEQUENCE PLAN - STAGE IV & V
0050-0021.800-009	BILL OF MATERIAL
0050-0021.800-010	BORING LOGS

REFERENCES

NO.	PLAN NO.	SHEET NO.	DESCRIPTION
1	X	X	JUNE 1, 2016 BNSF STANDARD BRIDGE & COMPONENT PLANS

TABLE OF EST. LIFTING WEIGHTS

ITEM	MARK NO.	ESTIMATED WEIGHT (LBS)
PRECAST P/S CONC. DBL. CELL BOX BEAM - TYPE II	B30-2710-VW	48,150
PRECAST P/S CONC. DBL. CELL BOX BEAM - TYPE II	B30-2710-E	45,370
PRECAST P/S CONC. DBL. CELL BOX BEAM - TYPE II	B30-2710-V	43,420
PRECAST P/S CONC. SLAB BEAM	B20-2110-VW	46,280
PRECAST P/S CONC. SLAB BEAM	B20-2110-E	44,100
PRECAST P/S CONC. SLAB BEAM	B20-2110-V	42,570
PRECAST CONC. ABUTMENT CAP	A20-3VR	21,510
PRECAST CONC. ABUTMENT CAP	A20-3VL	21,510
PRECAST CONC. BENT CAP	C00-1	20,060
PRECAST CONC. STEPPED BENT CAP	C10-1	22,820
PRECAST CONC. WINGWALL	W20-V	4,140

TABLE OF ELEVATIONS

LOCATION	MAIN #1 TOP/TIE	MAIN #2 TOP/TIE	TOP/CAP	PILE CUTOFF	T/T TO PILE CUTOFF
ABUT. 6	21.35	20.52	17.54	15.54	4'-11 3/4"
BENT 5	21.28	20.47	17.49/16.66	13.99	6'-5 3/4"
BENT 4	21.19	20.41	16.60	13.93	6'-5 3/4"
BENT 3	21.10	20.34	16.53	13.86	6'-5 3/4"
BENT 2	21.01	20.28	17.30/16.47	13.80	6'-5 3/4"
ABUT. 1	20.94	20.23	17.25	15.25	4'-11 3/4"

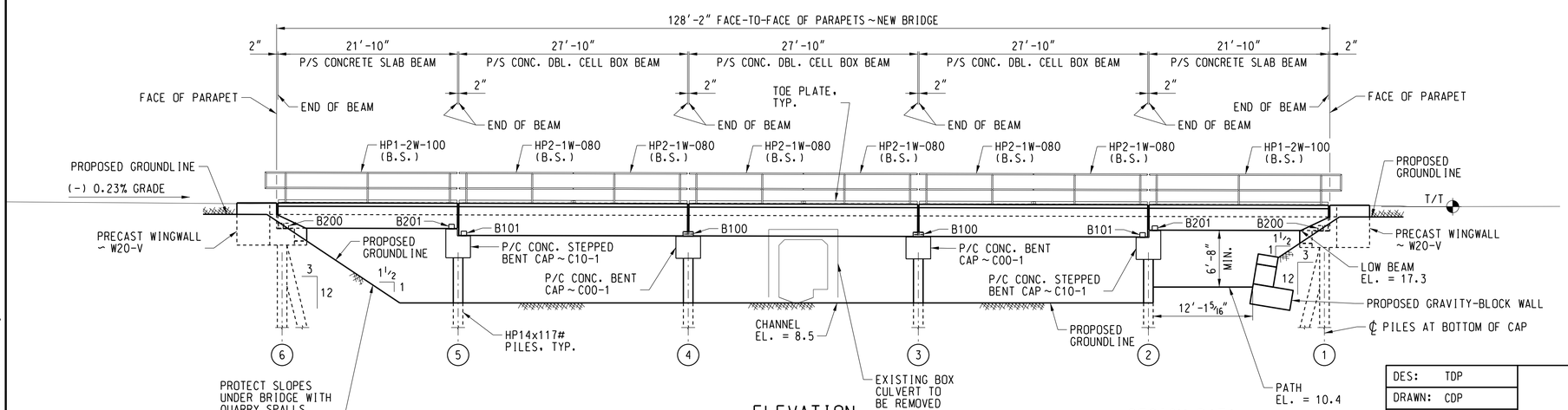

ELEVATION

LOOKING RY NORTH

NOTE: STATIONS ARE BASED ON MAIN #2

LEGEND:

T/T = TOP OF TIE
RY = RAILWAY
B.S. = BOTH SIDES

DESIGN DATA:

2018 A.R.E.M.A. DESIGN SPECIFICATIONS
LOADING: COOPER E 80 W/ DESIEL IMPACT

60% SUBMITTAL
NOT FOR CONSTRUCTION
05-04-18

DES:	TDP
DRAWN:	CDP
CHECK:	MAF
DATE:	05/04/2018
AUTH:	
LINE SEG:	0050

Snohomish County
Parks and Recreation

SEATTLE, WA TO WENATCHEE, WA
BRIDGE NUMBER 21.80A
OVER LUNDS GULCH CREEK
EDMONDS, WA
GENERAL PLAN & ELEVATION (MAIN #2)

PLAN NO: 0050-0021.800-001 | SHEET: 01 OF 10

HANSON
Hanson Professional Services Inc.

File Location: U:\Apps\HLX0088\CAD\Structl\Sheet\0218000001.dgn

Date Printed: 5/4/2018 Time Printed: 11:21:11 AM

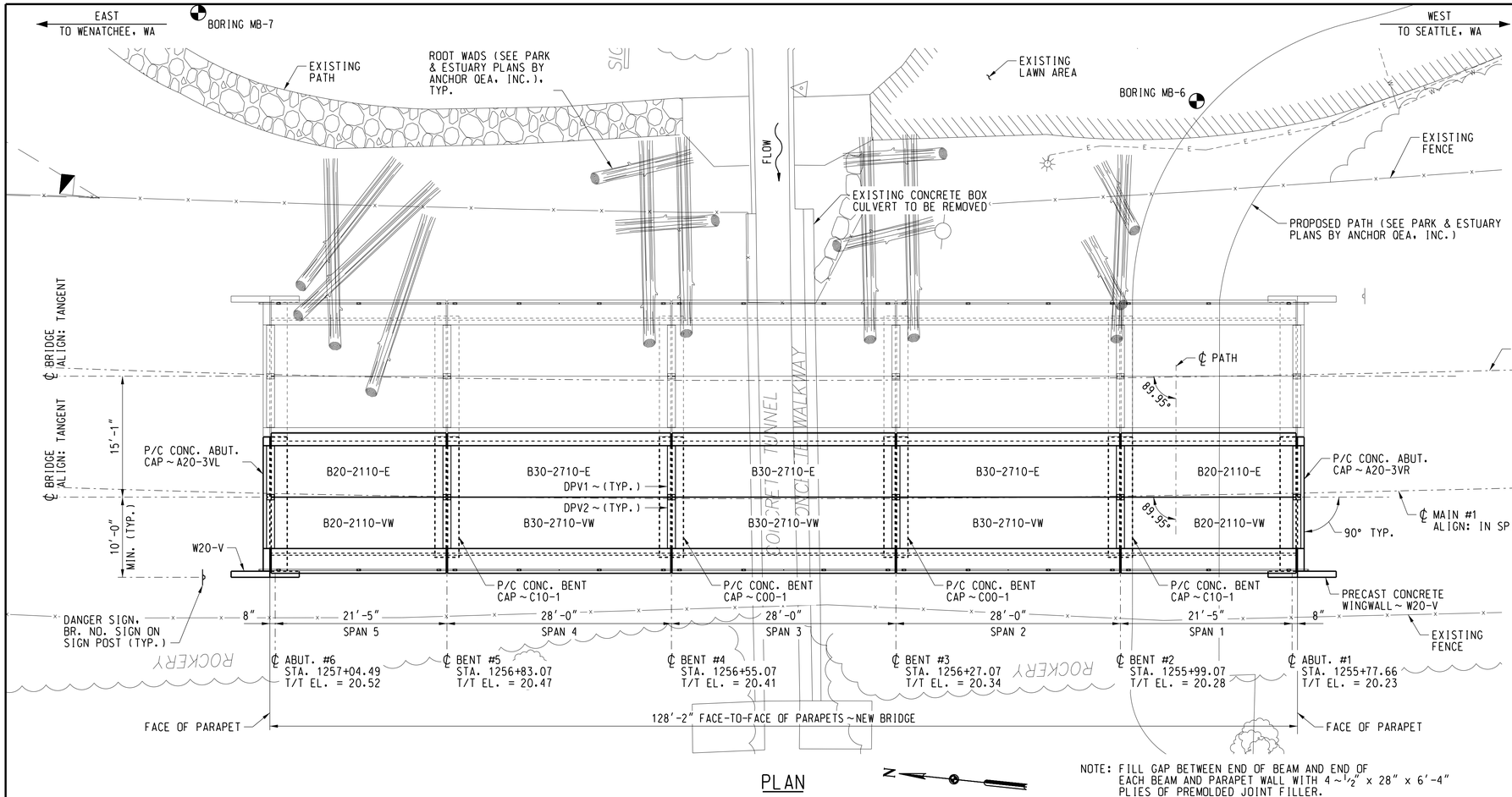

PLAN

NOTE: FILL GAP BETWEEN END OF BEAM AND END OF EACH BEAM AND PARAPET WALL WITH 4 ~ 1/2" x 28" x 6'-4" PLIES OF PREMOLDED JOINT FILLER.

LIST OF DRAWINGS - BR. 21.8A & 21.8B

PLAN NO.	TITLE
0050-0021.800-001	GENERAL PLAN & ELEVATION (MAIN #2)
0050-0021.800-002	GENERAL PLAN & ELEVATION (MAIN #1)
0050-0021.800-003	TYPICAL SECTIONS & PILE LAYOUT PLAN
0050-0021.800-004	CONSTRUCTION SEQUENCE NOTES & DETAILS
0050-0021.800-005	CONSTRUCTION SEQUENCE STAGING SECTIONS I, II & III
0050-0021.800-006	CONSTRUCTION SEQUENCE STAGING SECTIONS IV & V
0050-0021.800-007	CONSTRUCTION SEQUENCE PLAN - STAGE I, II & III
0050-0021.800-008	CONSTRUCTION SEQUENCE PLAN - STAGE IV & V
0050-0021.800-009	BILL OF MATERIAL
0050-0021.800-010	BORING LOGS

REFERENCES

NO.	PLAN NO.	SHEET NO.	DESCRIPTION
1	X	X	JUNE 1, 2016 BNSF STANDARD BRIDGE & COMPONENT PLANS

TABLE OF EST. LIFTING WEIGHTS

ITEM	MARK NO.	ESTIMATED WEIGHT (LBS)
PRECAST P/S CONC. DBL. CELL BOX BEAM - TYPE II	B30-2710-VW	48,150
PRECAST P/S CONC. DBL. CELL BOX BEAM - TYPE II	B30-2710-E	45,370
PRECAST P/S CONC. DBL. CELL BOX BEAM - TYPE II	B30-2710-V	43,420
PRECAST P/S CONC. SLAB BEAM	B20-2110-VW	46,280
PRECAST P/S CONC. SLAB BEAM	B20-2110-E	44,100
PRECAST P/S CONC. SLAB BEAM	B20-2110-V	42,570
PRECAST CONC. ABUTMENT CAP	A20-3VR	21,510
PRECAST CONC. ABUTMENT CAP	A20-3VL	21,510
PRECAST CONC. BENT CAP	C00-1	20,060
PRECAST CONC. STEPPED BENT CAP	C10-1	22,820
PRECAST CONC. WINGWALL	W20-V	4,140

TABLE OF ELEVATIONS

LOCATION	MAIN #1 TOP/TIE	MAIN #2 TOP/TIE	TOP/CAP	PILE CUTOFF	T/T TO PILE CUTOFF
ABUT. 6	21.35	20.52	17.54	15.54	4'-11 3/4"
BENT 5	21.28	20.47	17.49/16.66	13.99	6'-5 3/4"
BENT 4	21.19	20.41	16.60	13.93	6'-5 3/4"
BENT 3	21.10	20.34	16.53	13.86	6'-5 3/4"
BENT 2	21.01	20.28	17.30/16.47	13.80	6'-5 3/4"
ABUT. 1	20.94	20.23	17.25	15.25	4'-11 3/4"

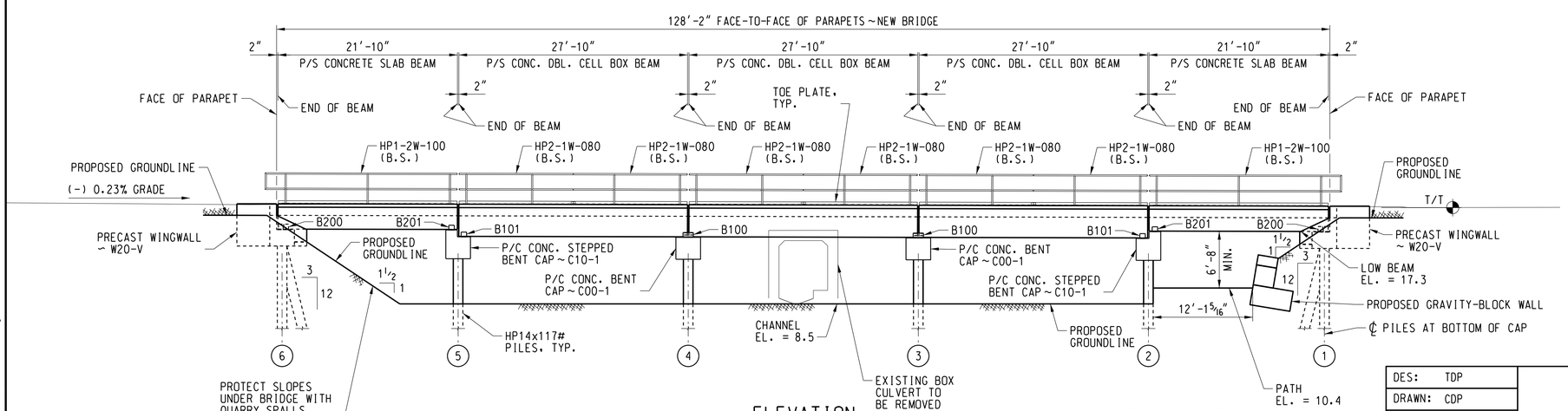

ELEVATION

LOOKING RY NORTH

NOTE: STATIONS ARE BASED ON MAIN #2

LEGEND:

T/T = TOP OF TIE
RY = RAILWAY
B.S. = BOTH SIDES

DESIGN DATA:

2018 A.R.E.M.A. DESIGN SPECIFICATIONS
LOADING: COOPER E 80 W/ DIESEL IMPACT

60% SUBMITTAL
NOT FOR CONSTRUCTION
05-04-18

DES:	TDP
DRAWN:	CDP
CHECK:	MAF
DATE:	05/04/2018
AUTH:	
LINE SEG:	0050

Snohomish County
Parks and Recreation

SEATTLE, WA TO WENATCHEE, WA
BRIDGE NUMBER 21.80B
OVER LUNDS GULCH CREEK
EDMONDS, WA
GENERAL PLAN & ELEVATION (MAIN #1)

PLAN NO: 0050-0021.800-002 | SHEET: 02 OF 10

HANSON
Hanson Professional Services Inc.

File Location: U:\Apps\ALU098\CAD\Struct\Sheet\0218000202.dgn

Date Printed: 5/4/2018 Time Printed: 11:21:59 AM

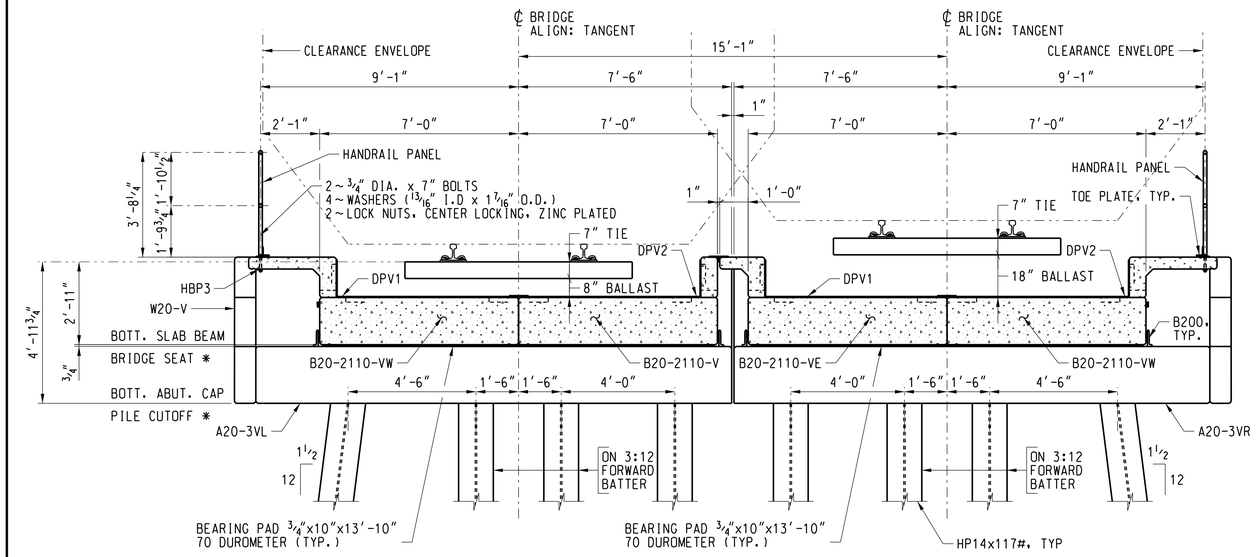

TYPICAL SECTION AT ABUTMENT

(WEST ABUTMENT SHOWN, EAST ABUTMENT OPPOSITE HAND)
(EXISTING TRACK ELEVATIONS SHOWN.)

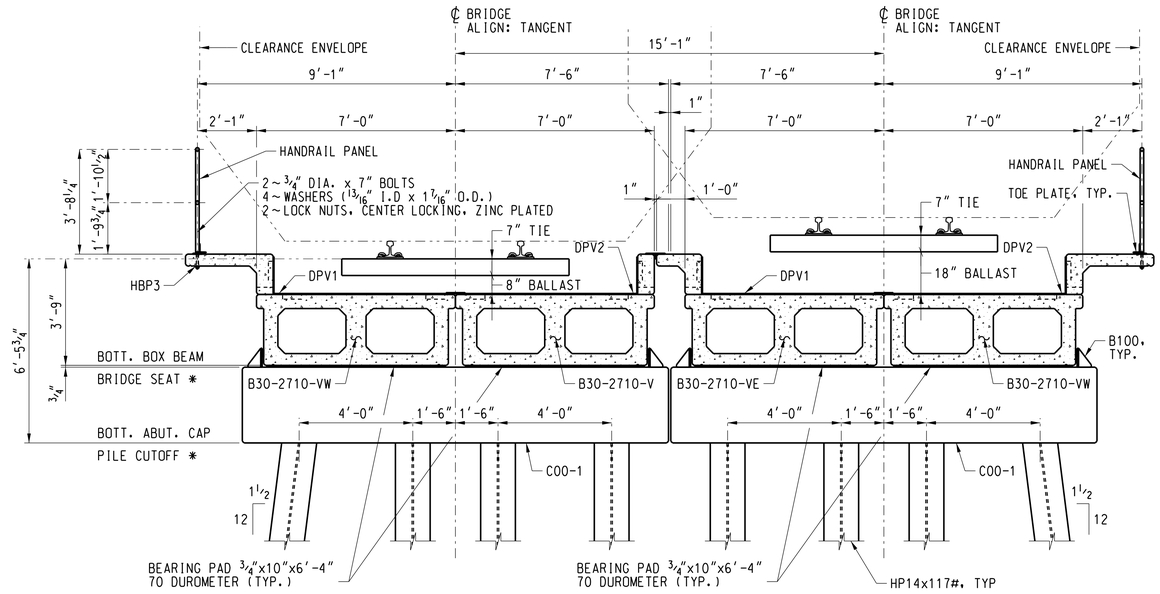

TYPICAL SECTION AT BENT

(LOOKING RY WEST)
(EXISTING TRACK ELEVATIONS SHOWN.)

* SEE ELEVATION TABLE ON SHEET 1 FOR ELEVATIONS.

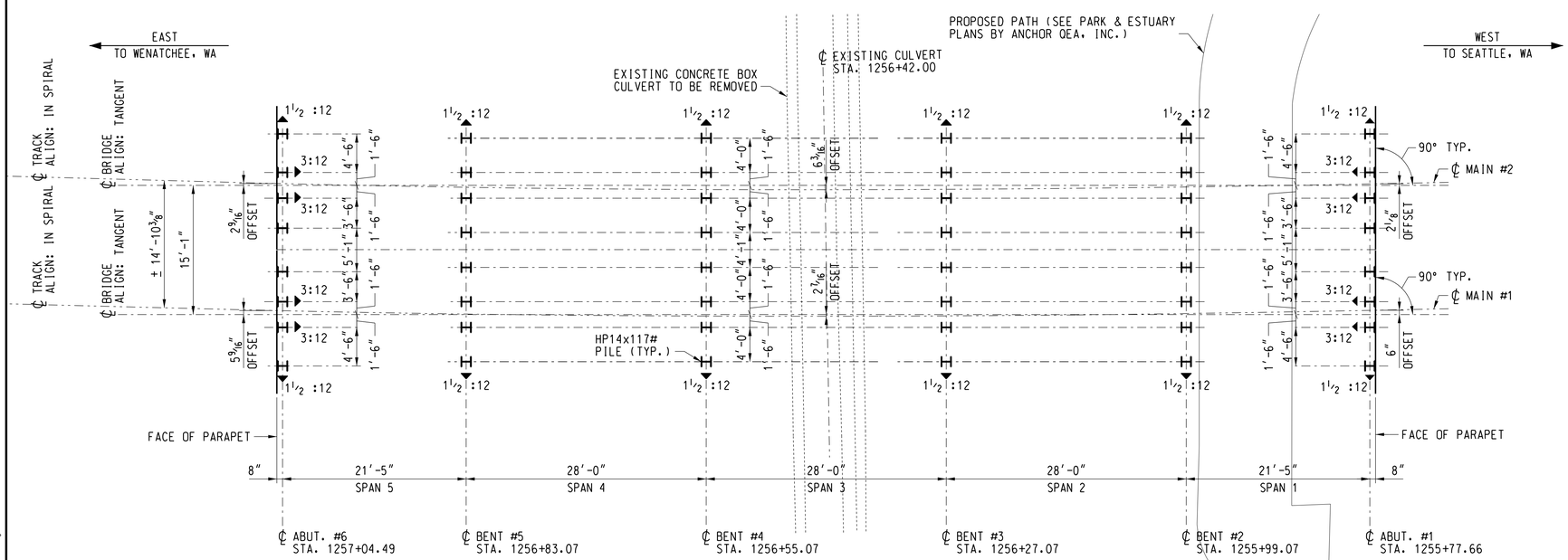

PLAN

NOTES:

▼ - INDICATES DIRECTION OF BATTER.

X:12 - INDICATES AMOUNT OF BATTER

ALL DIMENSIONS ARE GIVEN AT BOTTOM OF PRECAST CAP.

USE WELD METAL TO WRITE THE DATE AND AVERAGE PILE DEPTH IN 3 INCH TALL LETTERS ON EACH BENT.

PILES SHALL MEET THE MATERIAL REQUIREMENTS OF AND SHALL BE DRIVEN IN ACCORDANCE WITH BNSF STANDARD SPECIFICATIONS. HP14X117# PILES SHALL BE DRIVEN TO REFUSAL, IF POSSIBLE, OR TO A MINIMUM ULTIMATE RESISTANCE OF 250 TONS AS DETERMINED BY THE MODIFIED ENGINEERING NEWS-RECORD FORMULA AS PER THE BNSF ENGINEERING INSTRUCTION, 17.3.4.

PROVIDE PILE POINTS FOR PILES - MODEL VS314-117 BY VERSA STEEL INC., PORTLAND, OR OR EQUAL.

ESTIMATED PILE TIP ELEVATION OF PILES = EL. (-) 105

60% SUBMITTAL
NOT FOR CONSTRUCTION
05-04-18

DES:	TDP
DRAWN:	CDP
CHECK:	MAF
DATE:	05/04/2018
AUTH:	
LINE SEG:	0050

Snohomish County
Parks and Recreation

SEATTLE, WA TO WENATCHEE, WA
BRIDGE NUMBER 21.80
OVER LUNDS GULCH CREEK
EDMONDS, WA
TYPICAL SECTIONS & PILE LAYOUT PLAN

PLAN NO: 0050-0021.800-003 | SHEET: 03 OF 10

HANSON
Hanson Professional Services Inc.

File Location: E:\Projects\ALL0008\CAD\Struct\Sheet\02180000.dgn

Date Printed: 5/4/2018 Time Printed: 11:14:17 AM

CONSTRUCTION SEQUENCE

STAGE I
1. DRIVE H-PILE AT ALL LOCATIONS. CUT OFF BELOW TOP OF TIE. BNSF TO ADJUST TRACK TIES WHERE NEEDED. (SEE PILE LAYOUT PLAN)

STAGE II
1. PROVIDE TEMPORARY SOIL RETENTION SYSTEM BETWEEN MAIN TRACK #1 AND MAIN TRACK #2. (SEE THIS SHEET)

STAGE III
1. WITH MAIN #2 CLOSED: EXCAVATE AND CUT H-PILE TO CORRECT ELEVATION AT ABUTMENTS AND PIERS.
2. REMOVE EXISTING CONCRETE BOX CULVERT AS REQUIRED.
3. PLACE AND WELD PRECAST ABUTMENT & PIER CAPS.
4. PLACE CONTROLLED LOW-STRENGTH MATERIAL AT ABUTMENTS.
5. EXCAVATE BETWEEN FOUNDATION ELEMENTS AS REQUIRED TO INSTALL SUPERSTRUCTURE.
6. BACKFILL ABUTMENT CAPS.
7. SET BEARING PADS AND INSTALL SUPERSTRUCTURE.
8. BNSF TO INSTALL TRACKS ON MAIN #2 AND OPEN TO RAIL TRAFFIC.

STAGE IV- SAME AS III WITH CLOSURE WINDOW ON MAIN TRACK #1

- TEMPORARY SOIL RETENTION SYSTEM SHALL BE REMOVED (LOCATIONS OF INTERFERENCE WITH STRUCTURE INSTALLATION) AT ANY TIME AFTER EXCAVATION FOR THE SUPERSTRUCTURE DURING CLOSURE WINDOW AND COORDINATED WITH THE BNSF REPRESENTATIVE (SEE NOTE 3 BELOW).

STAGE V
1. EXCAVATE TO REQUIRED ELEVATIONS FOR STREAM RESTORATION.
2. COMPLETELY REMOVE REMAINING POTIONS OF CULVERT.
3. CONSTRUCT NEW WALK PATH.

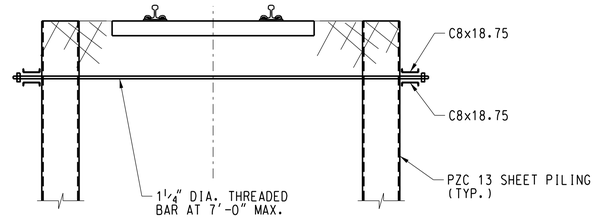

VIEW B-B

TYPICAL AT TIEBACKS

NOTES

1. THE CONTRACTOR MUST COORDINATE WITH THE BNSF REPRESENTATIVE TO WORK AROUND THE TRAIN SCHEDULE TO MINIMIZE THE IMPACT ON TRAIN OPERATIONS.
2. THE CONTRACTOR SHALL INSTALL THE STEEL H-PILES AND TEMPORARY SOIL RETENTION SYSTEM IN XX (X) HOUR CLOSURE WINDOWS. CONTRACTOR SHALL COORDINATE WITH BNSF ON MOVING TIES TO INSTALL PILES AND SHORING. THE XX (X) HOUR CLOSURE WINDOW SHALL INCLUDED TIME FOR BNSF FORCES TO MAKE MODIFICATIONS TO TIES AND/OR RAIL AS NEEDED TO COMPLETE WORK AND PRIOR TO RESTORING TRAIN OPERATIONS.
3. ONLY CONCEPTUAL LAYOUT AND DETAILS ARE SHOWN FOR THE TEMPORARY SOIL RETENTION SYSTEM. THE FINAL DESIGN AND DETAILS ARE THE RESPONSIBILITY OF THE CONTRACTOR. FINAL DESIGN AND DETAILS SIGNED AND SEALED BY A REGISTERED STRUCTURAL ENGINEER IN THE STATE OF WASHINGTON SHALL BE SUBMITTED TO THE ENGINEER FOR REVIEW AND APPROVAL.
4. FINAL CONSTRUCTION SEQUENCE, DESIGN AND DETAILS SHALL BE SUBMITTED TO BNSF FOR APPROVAL AND COORDINATION PRIOR TO INSTALLATION OF THE TEMPORARY SOIL RETENTION SYSTEM.
5. FOR ADDITIONAL SUGGESTED CONSTRUCTION SEQUENCE AND DETAILS, SEE SHEETS 04 TO 07.
6. MATS OR OTHER MEANS OF PROTECTION MUST BE PROVIDED TO PROTECT RAILS AND BALLAST FROM DAMAGE DUE TO EQUIPMENT OR CONSTRUCTION OPERATIONS. COST INCLUDED IN TRACK MONITORING. DETAILS SHALL BE SUBMITTED TO BNSF FOR REVIEW AND APPROVAL.
7. DESIGN OF TEMPORARY SOIL RETENTION SYSTEM SHOULD BE PER THE BNSF GUIDELINES FOR TEMPORARY SHORING.
8. RAILROAD UTILITIES MAY EXIST WITHIN BNSF RIGHT-OF-WAY. PRIOR TO THE START OF ANY CONSTRUCTION OR EXCAVATION, UTILITY RELOCATIONS WILL HAVE TO BE COORDINATED WITH BNSF.
9. ALL WELDING OF CAPS TO PILES SHALL BE PERFORMED BY A CERTIFIED WELDER.
10. BNSF WILL CUT EXISTING TRACK PANELS TO BE REMOVED (INTO 40 FOOT LENGTHS) AND THE CONTRACTOR WILL BE RESPONSIBLE FOR REMOVAL OF THE TRACK FROM THE BALLAST.

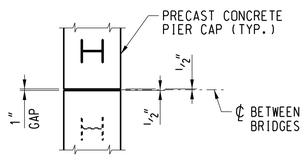

PLAN - PIER CAPS

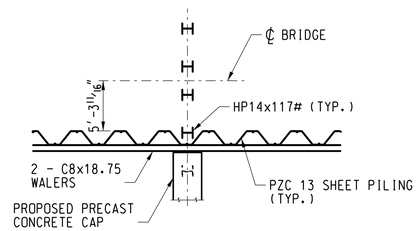

VIEW A-A

TYPICAL AT ABUTMENTS & PIERS

BNSF REQUIREMENTS

NOTES

1. CONTRACTOR SHALL NOTE DATES FOR BNSF TO MOVE TIES IN 3 WEEK PLANNING SCHEDULES TO COORDINATE WORK WITH BNSF FORCES
2. DURING CLOSURE WINDOW, THE MOVEMENT AND LOCATION OF PERSONAL AND EQUIPMENT SHALL BE RESTRICTED DURING PASSAGE OF TRAINS ON ADJACENT TRACKS. THE CONTRACTOR SHALL COORDINATE WITH BNSF REPRESENTATIVE.
3. CONTRACTOR SCHEDULE MUST INCLUDE TIME FOR BNSF FORCES TO MODIFY TIES AND/OR RAIL AS NEEDED.
4. STAGE CLOSURE WINDOWS SHALL BE COORDINATED A MINIMUM OF 60 DAYS AHEAD OF WHEN REQUIRED.

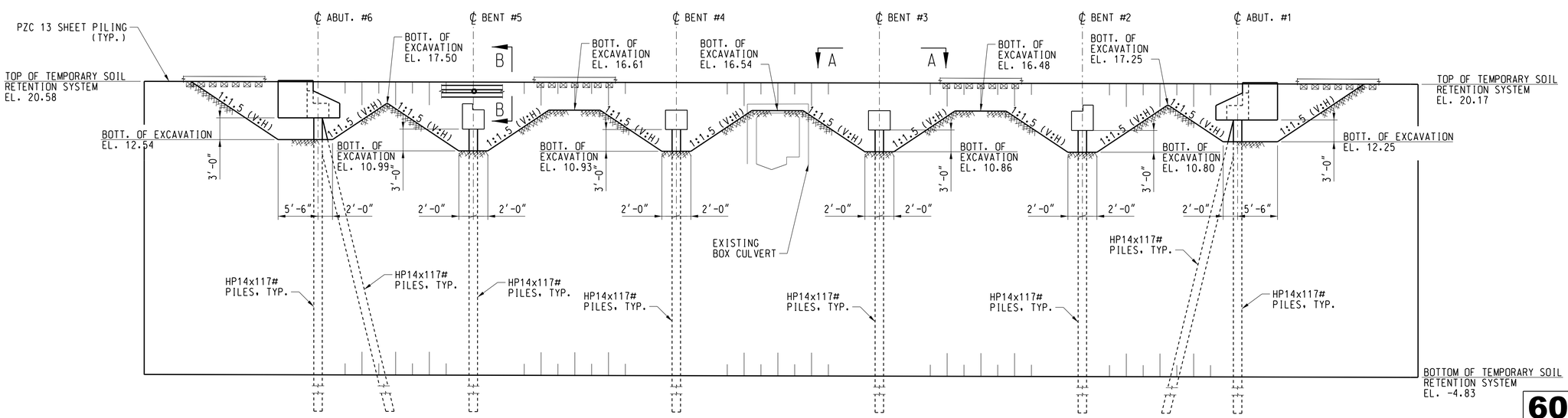

TYPICAL SECTION - TEMPORARY SOIL RETENTION SYSTEM

60% SUBMITTAL
NOT FOR CONSTRUCTION
05-04-18

NOTES:

1. THE TEMPORARY SOIL RETENTION SYSTEM INCLUDES TWO DIFFERENT EXCAVATION REQUIREMENTS: (1) DEPTH TO ALLOW FOR SETTING OF SUPERSTRUCTURE. (2) DEPTH TO ALLOW FOR SETTING AND ATTACHING PRECAST CAPS AND ASSOCIATED SAFE WORKING SLOPES.
2. AT ABUTMENTS & PIERS, A CANTILEVERED SHEET PILING DESIGN MAY NOT BE FEASIBLE AND ADDITIONAL MEMBERS OR OTHER RETENTION SYSTEMS MAY BE NECESSARY. THE CONTRACTOR SHALL SUBMIT A TEMPORARY SOIL RETENTION SYSTEM DESIGN INCLUDING PLAN DETAILS AND CALCULATIONS SIGNED AND SEALED BY A REGISTERED STRUCTURAL ENGINEER IN THE STATE OF WASHINGTON TO THE ENGINEER FOR REVIEW AND APPROVAL PRIOR TO COMMENCING CONSTRUCTION.
3. IF THE CONTRACTOR ELECTS TO CUT AND REMOVE PORTIONS OF THE TEMPORARY SOIL RETENTION WALL INSTEAD OF REMOVING THE ENTIRE WALL, THE WALL SHALL BE REMOVED TO AN ELEVATION OF 3.5 BETWEEN THE PROPOSED BRIDGE PIERS AND TO AN ELEVATION OF 5' BELOW FINISHED GRADE AT LOCATIONS OUTSIDE OF THE PIERS.

HANSON
Hanson Professional Services Inc.

DES:	TDP
DRAWN:	CDP
CHECK:	MAF
DATE:	05/04/2018
AUTH:	
LINE SEG:	0050

Snohomish County
Parks and Recreation

SEATTLE, WA TO WENATCHEE, WA
BRIDGE NUMBER 21.80
OVER LUNDS GULCH CREEK
EDMONDS, WA
CONSTRUCTION SEQUENCE NOTES & DETAILS

PLAN NO: 0050-0021.800-004 | SHEET: 04 OF 10

File Location: E:\Projects\4L0098\CAD\Struct\Sheet\0218000004.dgn
Date Printed: 5/4/2018 Time Printed: 11:26:15 AM

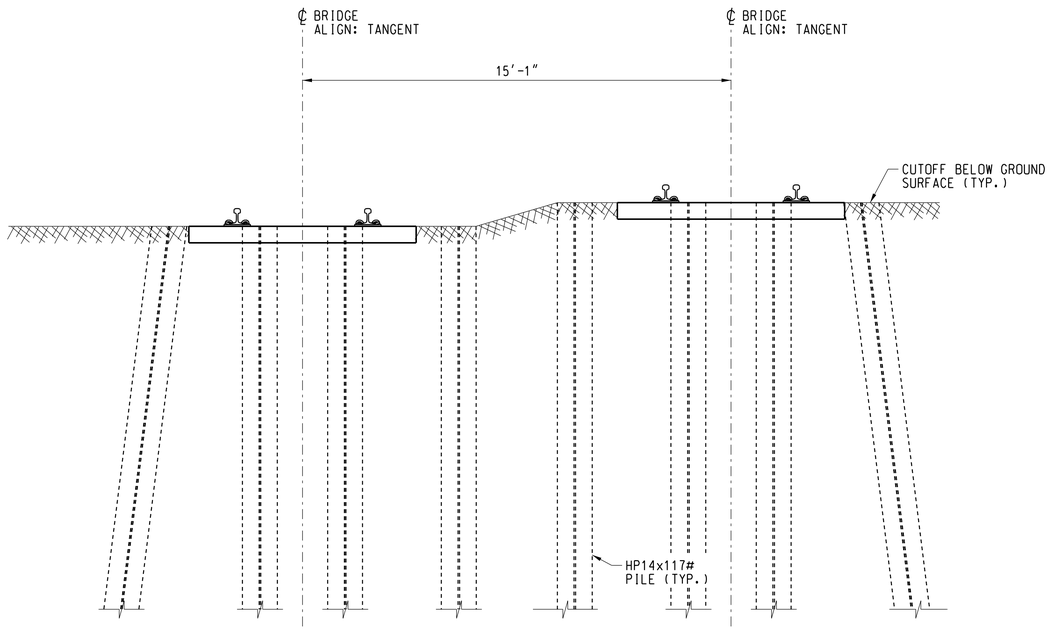

CONSTRUCTION SEQUENCE SECTION - STAGE I

(LOOKING RY WEST AT BENT #3)

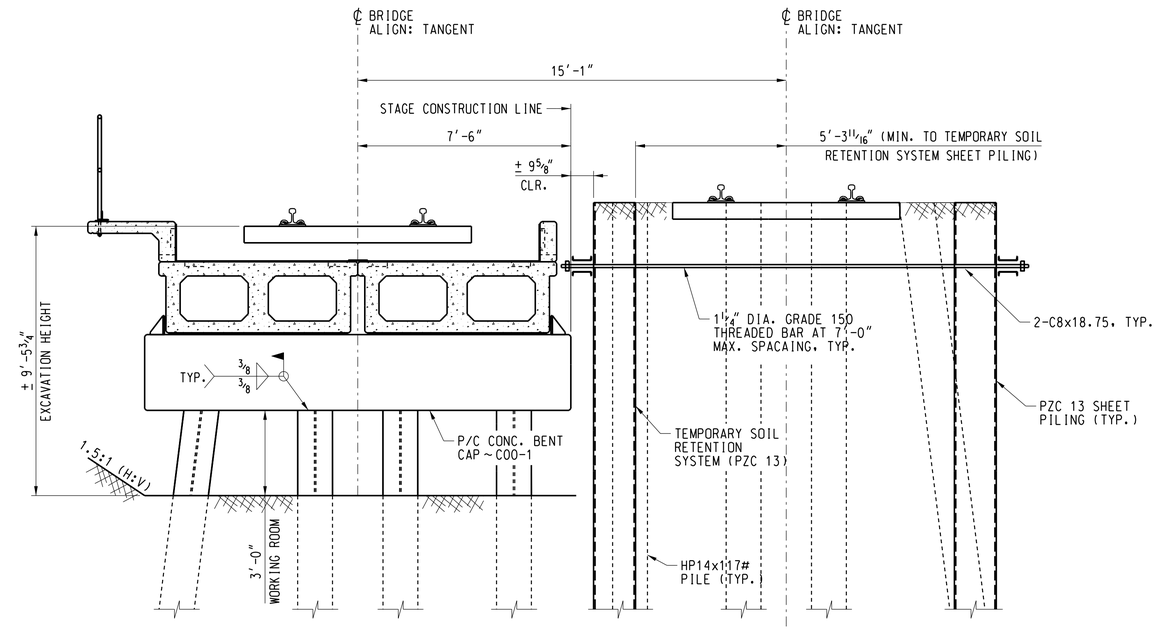

CONSTRUCTION SEQUENCE SECTION - STAGE III

(LOOKING RY WEST AT BENT #3)

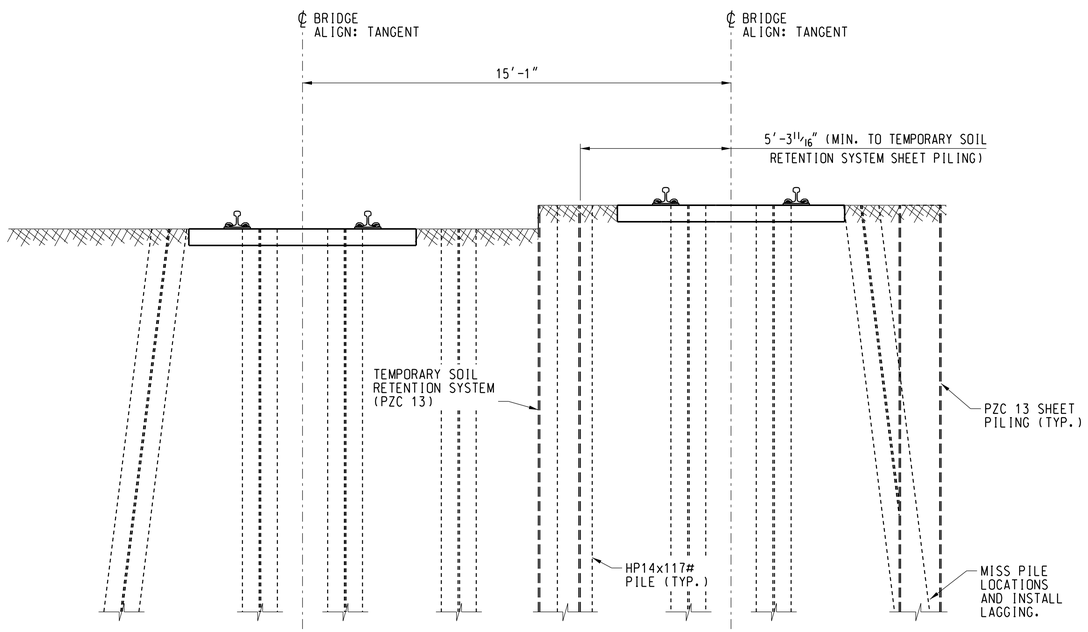

CONSTRUCTION SEQUENCE SECTION - STAGE II

(LOOKING RY WEST AT BENT #3)

60% SUBMITTAL
NOT FOR CONSTRUCTION
05-04-18

DES:	TDP
DRAWN:	CDP
CHECK:	MAF
DATE:	05/04/2018
AUTH:	
LINE SEG:	0050

Snohomish County
Parks and Recreation

SEATTLE, WA TO WENATCHEE, WA
BRIDGE NUMBER 21.80
OVER LUNDS GULCH CREEK
EDMONDS, WA
CONSTRUCTION SEQUENCE
STAGING SECTIONS I, II, & III

PLAN NO: 0050-0021.800-005 | SHEET: 05 OF 10

HANSON
Hanson Professional Services Inc.

File Location: I:\14jobs\14L0068\CAD\Struct\Sheet\02180005.dgn

Date Printed: 5/4/2018 Time Printed: 11:18:21 AM

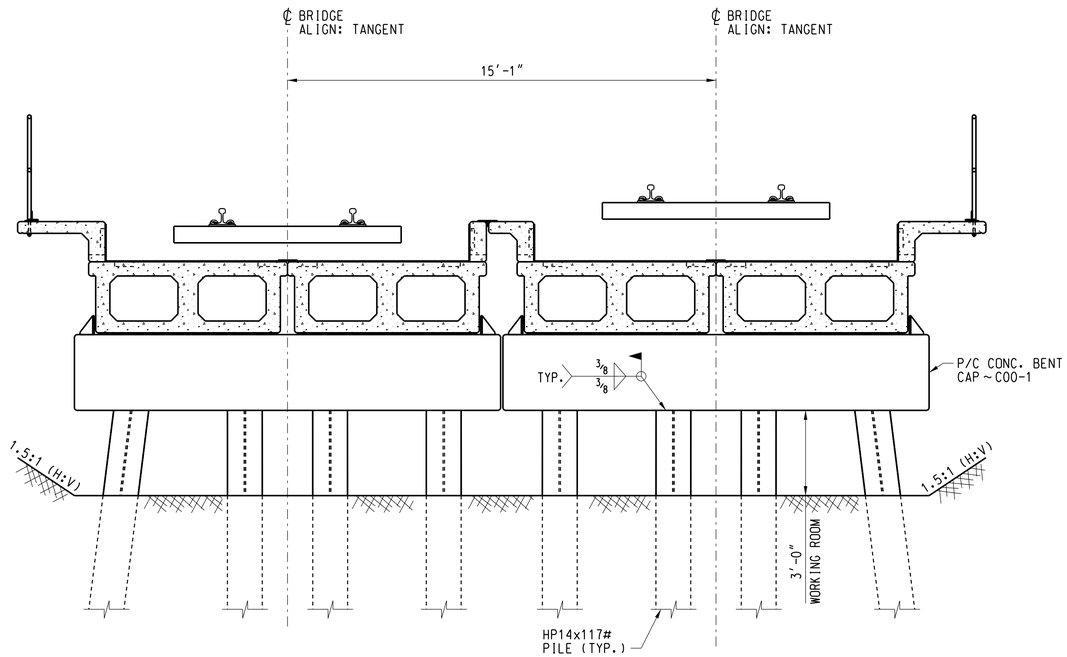

CONSTRUCTION SEQUENCE SECTION - STAGE IV

(LOOKING RY WEST AT BENT #3)

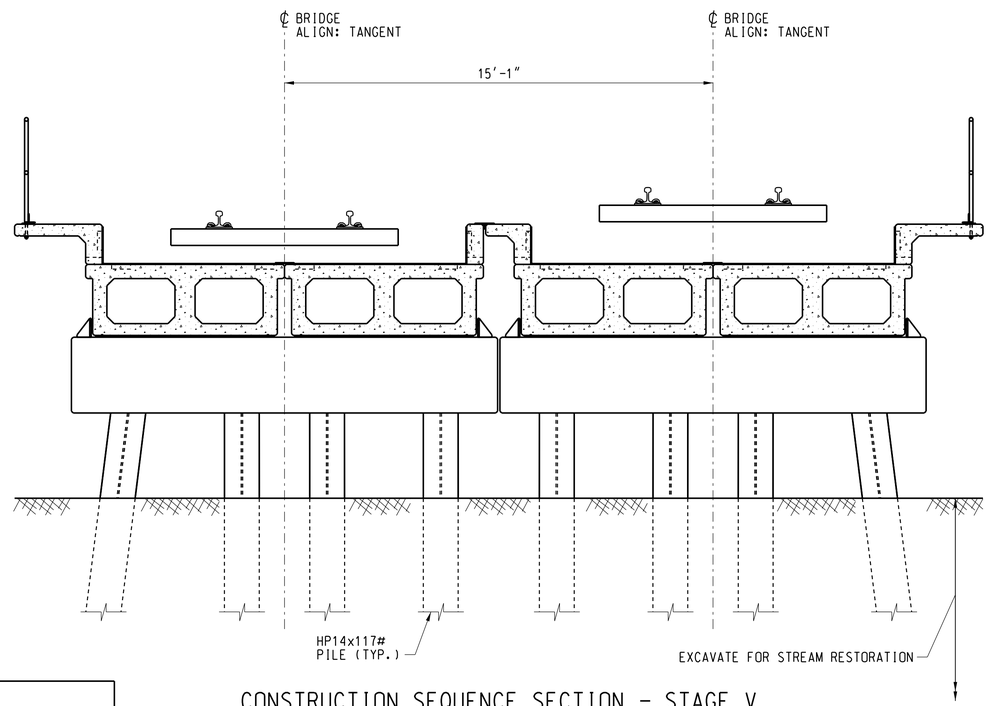

CONSTRUCTION SEQUENCE SECTION - STAGE V

(LOOKING RY WEST AT BENT #3)

HANSON
Hanson Professional Services Inc.

File Location: I:\14jobs\14L0068\CAD\Struct\Sheet\02180006.dgn

Date Printed: 5/4/2018 Time Printed: 11:18:51 AM

60% SUBMITTAL
NOT FOR CONSTRUCTION
05-04-18

DES:	TDP
DRAWN:	CDP
CHECK:	MAF
DATE:	05/04/2018
AUTH:	
LINE SEG:	0050

Snohomish County
Parks and Recreation

SEATTLE, WA TO WENATCHEE, WA
BRIDGE NUMBER 21.80
OVER LUNDS GULCH CREEK
EDMONDS, WA
CONSTRUCTION SEQUENCE
STAGING SECTIONS IV & V

PLAN NO: 0050-0021.800-006 | SHEET: 06 OF 10

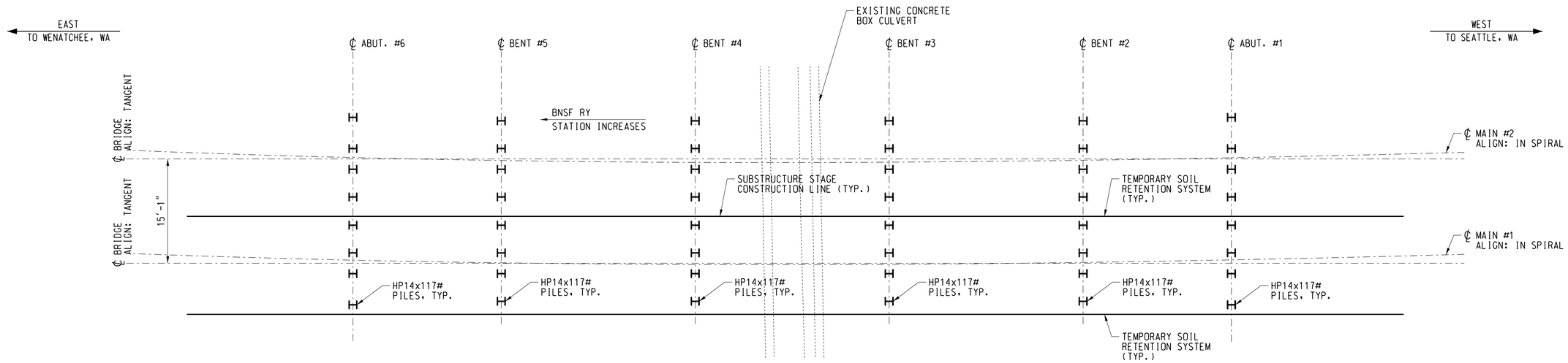

PLAN - STAGE I & II

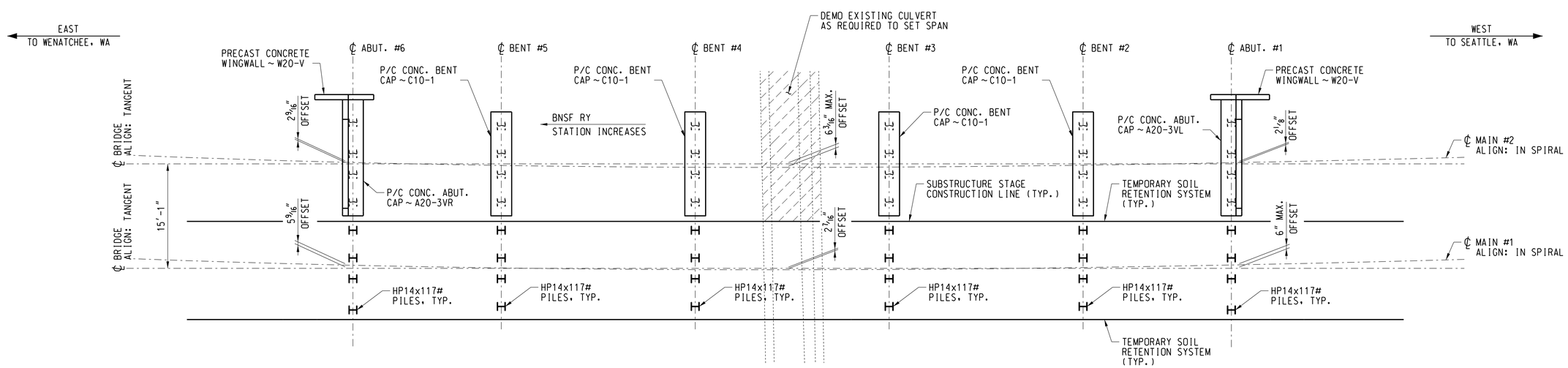

PLAN - STAGE III

MAIN #2 SUPERSTRUCTURE NOT SHOWN FOR CLARITY.

60% SUBMITTAL
NOT FOR CONSTRUCTION
05-04-18

DES:	TDP
DRAWN:	CDP
CHECK:	MAF
DATE:	05/04/2018
AUTH:	
LINE SEG:	0050

Snohomish County
Parks and Recreation

SEATTLE, WA TO WENATCHEE, WA
BRIDGE NUMBER 21.80
OVER LUNDS GULCH CREEK
EDMONDS, WA
CONSTRUCTION SEQUENCE
STAGE I, II & III

PLAN NO: 0050-0021.800-007 | SHEET: 07 OF 10

HANSON
Hanson Professional Services Inc.

File Location: I:\14jobs\14L0068\CAD\Struct\Sheet\02180007.dgn

Date Printed: 5/4/2018 Time Printed: 11:19:14 AM

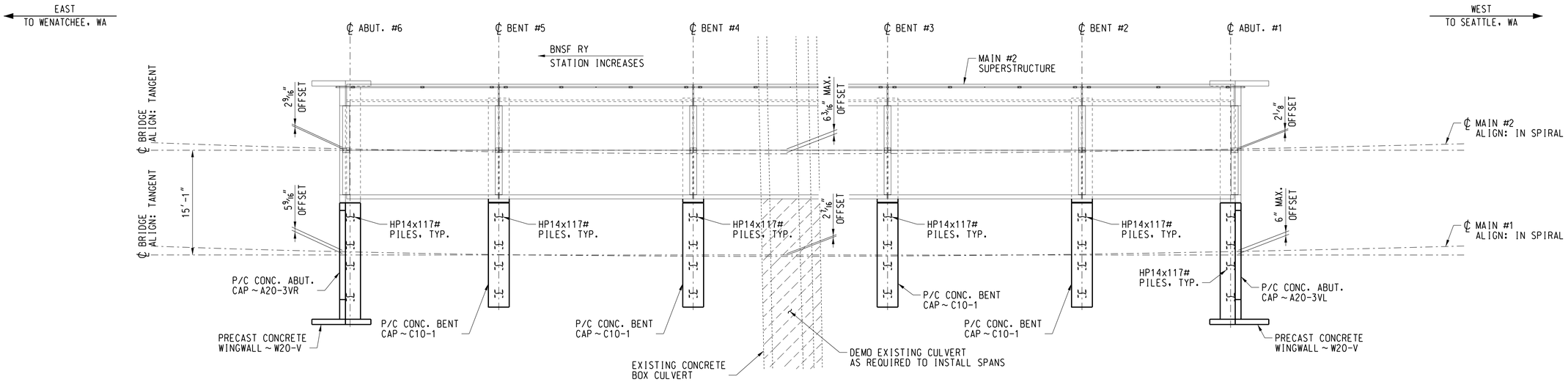

PLAN - STAGE IV

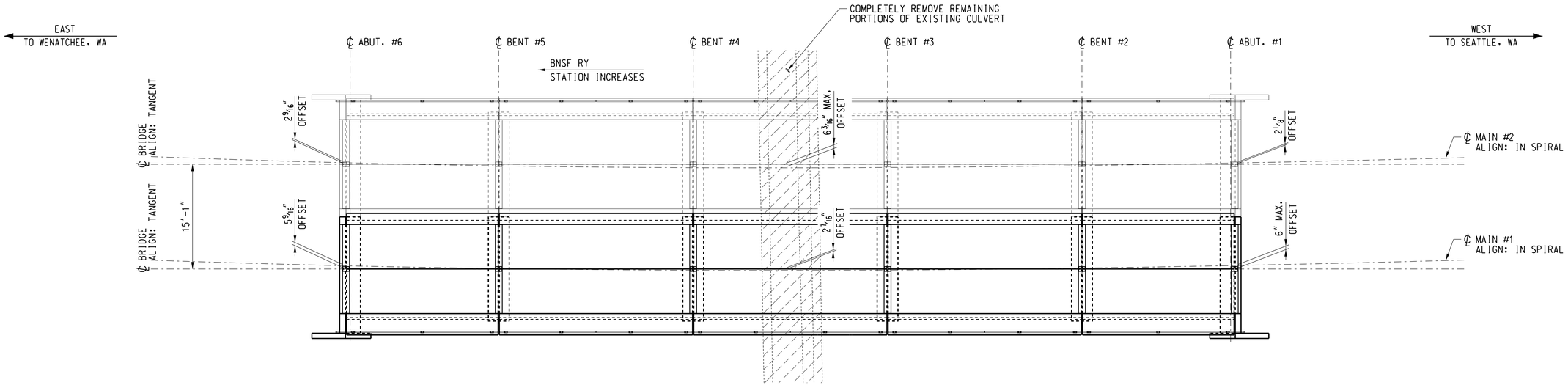

PLAN - STAGE V

(COMPLETELY REMOVE TEMPRARY SHORING BEFORE PLACEMENT OF SPANS ON MAIN #1)

60% SUBMITTAL
NOT FOR CONSTRUCTION
05-04-18

DES:	TDP
DRAWN:	CDP
CHECK:	MAF
DATE:	05/04/2018
AUTH:	
LINE SEG:	0050

Snohomish County
Parks and Recreation

SEATTLE, WA TO WENATCHEE, WA
BRIDGE NUMBER 21.80
OVER LUNDS GULCH CREEK
EDMONDS, WA
CONSTRUCTION SEQUENCE - STAGE IV & V

PLAN NO: 0050-0021.800-008 | SHEET: 08 OF 10

HANSON
Hanson Professional Services Inc.

File Location: I:\14jobs\14L0068\CAD\Struct\Sheet\02180008.dgn
Date Printed: 5/4/2018 Time Printed: 11:26:55 AM

REQ. NO.:	REQUEST ID.:	LINE SEG.: 0050	MILE POST: 21.80	DELIVERY DATE:	
SHIP TO: BNSF RAILWAY CO. %: 0		SEND SHIPPING PAPERS TO:		ACCT.:	COST CLASS:
				WORK REASON:	COST CTR.:
				LOC. NO.:	TAX CODE:
				AUTH.:	P.O. NO.:

SIGNATURE _____ TITLE: _____ DATE: _____

BILL OF MATERIAL

LINE	QUAN.	UNIT.	DESCRIPTION	MARK	SIZE	LENGTH	REMARKS
1	2	EA	P/C P/S CONC. SLAB BEAM w/ CURB	B20-2110-V	20"x7'-0"	21'-10"	PER PLAN NO. 0000-1210-01 & 02
2	2	EA	P/C P/S CONC. SLAB BEAM w/ SPECIAL CURB	B20-2110-E	20"x7'-0"	21'-10"	PER PLAN NO. 0000-1210-01 & 02
3	4	EA	P/C P/S CONC. SLAB BEAM w/ WALK	B20-2110-VW	20"x7'-0"	21'-10"	PER PLAN NO. 0000-1210-01 & 02
4	3	EA	P/C P/S CONC. BOX BEAM w/ CURB	B30-2710-V	30"x7'-0"	27'-10"	PER PLAN NO. 0000-1212-01 & 02
5	3	EA	P/C P/S CONC. BOX BEAM w/ SPECIAL CURB	B30-2710-E	30"x7'-0"	27'-10"	PER PLAN NO. 0000-1212-01 & 02
6	6	EA	P/C P/S CONC. BOX BEAM w/ WALK	B30-2710-VW	30"x7'-0"	27'-10"	PER PLAN NO. 0000-1212-01 & 02
7	2	EA	PRECAST CONC. CAP - ABUTMENT	A20-3VR	3'-0"x5'-1 3/4"	16'-9"	PER PLAN NO. 0000-1120-05
8	2	EA	PRECAST CONC. CAP - ABUTMENT	A20-3VL	3'-0"x5'-1 3/4"	16'-9"	PER PLAN NO. 0000-1120-05
9	4	EA	PRECAST CONC. CAP - BENT	C00-1	3'-0"x2'-8"	15'-0"	PER PLAN NO. 0000-1110-01
10	2	EA	PRECAST CONC. CAP - BENT	C10-1	3'-0"x3'-6"	15'-0"	PER PLAN NO. 0000-1110-04
11	4	EA	PRECAST CONC. WINGWALL	W20-V	9"x5'-1 3/4"	8'-6"	PER PLAN NO. 0000-1121-02
12							
13	730,080	LBS.	STEEL H-PILES (96 PIECES)		HP14x117#	65'-0"	MAT'L PER ASTM 572, GR. 50
14							
15	8	EA	WASHER, GALVANIZED	W100	4"x3/4"	4"	PER PLAN NO. 0000-1000-06
16	6	EA	DECK PLATE, GALVANIZED	DPV1	12"x3/8"	7'-9 1/2"	PER PLAN NO. 0000-1910-04
17	6	EA	DECK PLATE, GALVANIZED	DPV2	12"x3/8"	7'-9 1/2"	PER PLAN NO. 0000-1910-04
18	4	EA	RESTRAINER BRACKET	B100	PC OF HP14x89#	8"	PER PLAN NO. 0000-1910-05
19	4	EA	RESTRAINER BRACKET	B101	PC OF HP14x89#	8"	PER PLAN NO. 0000-1910-05
20	4	EA	RESTRAINER BRACKET	B200	∠7"x4"x3/4"	1'-3"	PER PLAN NO. 0000-1910-05
21	4	EA	RESTRAINER BRACKET	B201	∠7"x4"x3/4"	8"	PER PLAN NO. 0000-1910-05
22							
23	4	EA	HANDRAIL PANEL w/ TOE PLATES, GALVANIZED	HP1-2W-100	1 1/2" DIA. PIPE	23'-4 1/2"	PER PLAN NO. 0000-1221-01
24	12	EA	HANDRAIL PANEL w/ TOE PLATES, GALVANIZED	HP2-1W-080	1 1/2" DIA. PIPE	13'-10 1/4"	PER PLAN NO. 0000-1221-01
25	36	EA	PLATE, GALVANIZED	HBP3	1/4"x1 1/2"	6"	PER PLAN NO. 0000-1910-06
26	72	EA	BOLT, HEX HEAD, GALVANIZED		3/4" DIA.	7"	PER PLAN NO. 0000-1000-13
27	144	EA	STD. WASHER, GALVANIZED 13/16" I.D. x 1 7/16" O.D.				PER PLAN NO. 0000-1000-13
28	72	EA	LOCK NUT, CENTER LOCKING, ZINC PLATED		3/4" DIA.		PER PLAN NO. 0000-1000-13
29							
30	8	EA	BEARING PAD, URETHANE, 70 DUROMETER		3/4"x10"	13'-10"	PER PLAN NO. 0000-1000-13
31	24	EA	BEARING PAD, URETHANE, 70 DUROMETER		3/4"x10"	6'-4"	PER PLAN NO. 0000-1000-13
32	64	EA	PREMOLDED JOINT FILLER, ASPHALT IMPREGNATED		1/2"x18"	6'-10"	PER PLAN NO. 0000-1000-06
33	32	EA	PREMOLDED JOINT FILLER, ASPHALT IMPREGNATED		1/2"x28"	6'-4"	PER PLAN NO. 0000-1000-06
34							
35	2	EA	BRIDGE NO. SIGN	21.80			DETAILS PLAN 3103.01.03
36	2	EA	DANGER SIGN, NO. 70		16"x30"		DETAILS PLAN 3070.01.01
37	2	EA	SIGN POST, NO. 1 BLACK			11'-0"	(TRACK STD. PLAN BOOK)
38							
39							

SUPERVISOR STRUCTURES TO PROVIDE:

60% SUBMITTAL
NOT FOR CONSTRUCTION
05-04-18

DES:	TDP
DRAWN:	CDP
CHECK:	MAF
DATE:	05/04/2018
AUTH:	
LINE SEG:	0050

Snohomish County
Parks and Recreation

SEATTLE, WA TO WENATCHEE, WA
BRIDGE NUMBER 21.80
OVER LUNDS GULCH CREEK
EDMONDS, WA
BILL OF MATERIAL

PLAN NO: 0050-0021.800-009 SHEET: 09 OF 10

HANSON
Hanson Professional Services Inc.

File Location: U:\Apps\HLD08\CAD\Struct\Sheet\0218000009.dgn

Date Printed: 5/4/2018 Time Printed: 11:20:12 AM

BORING LOG LEGEND

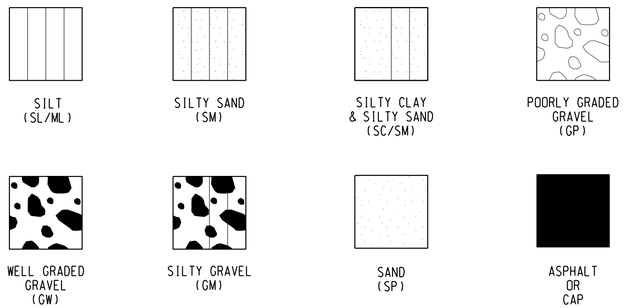

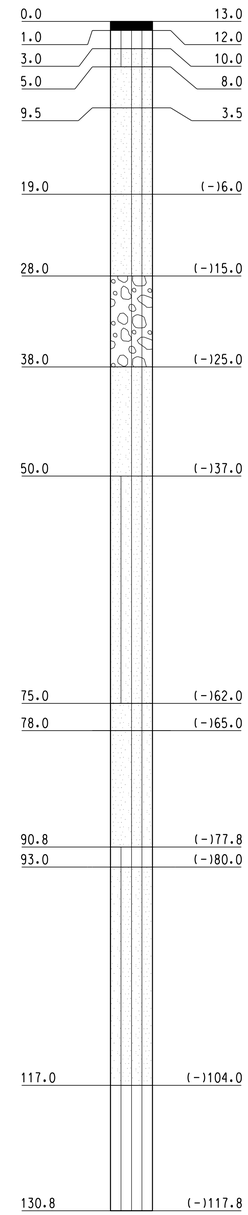

BORING MB-6

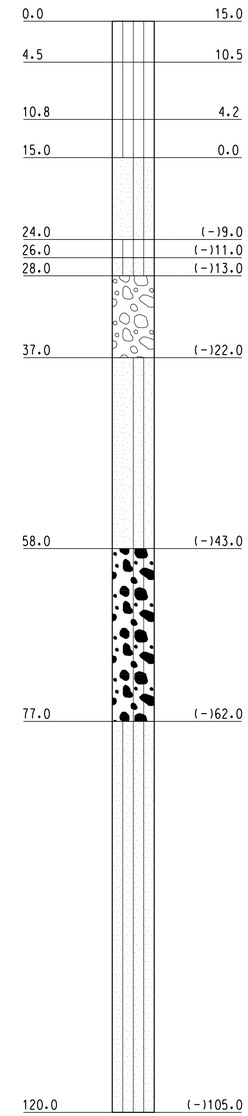

BORING MB-7

60% SUBMITTAL
NOT FOR CONSTRUCTION
05-04-18

NOTE:
STICK BORING LOGS PROVIDED FOR REFERENCE ONLY. SEE GEOTECHNICAL REPORT BY SHANNON & WILSON, INC. FOR FULL DETAILS.

DES:	TDP
DRAWN:	CDP
CHECK:	MAF
DATE:	05/04/2018
AUTH:	
LINE SEG:	0050

Snohomish County
Parks and Recreation

SEATTLE, WA TO WENATCHEE, WA
BRIDGE NUMBER 21.80
OVER LUNDS GULCH CREEK
EDMONDS, WA
BORING LOGS

PLAN NO: 0050-0021.800-010 | SHEET: 10 OF 10

HANSON
Hanson Professional Services Inc.

File Location: I:\1-Jobs\14L0068\CAD\Struct\Sheet\02180010.dgn

Date Printed: 5/4/2018 Time Printed: 11:20:36 AM